Unit-3

1) What is Spanning tree? Describe the steps of creating a spanning tree?

Answer: -

1) In graph theory, a spanning tree is a graph in which there is no loop. In a bridged LAN, this means creating a topology in which each LAN can be reached from any other LAN through one path only (no loop).
2) We cannot change the physical topology of the system because of physical connections between cables and bridges, but we can create a logical topology that overlay the physical one.
3) Figure shows a system with four LANs and five bridges. We have shown the physical system and its representation in graph theory. Although some textbooks represent the LANs as nodes and the bridges as the connecting arcs, we have shown both LANs and bridges as nodes.
4) The connecting arcs show the connection of a LAN to a bridge and vice versa. To find the spanning tree, we need to assign a cost (metric) to each arc.
5) The interpretation of the cost is left up to the systems administrator. It may be the path with minimum hops (nodes), the path with minimum delay, or the path with maximum bandwidth.
6) If two ports have the same shortest value, the systems administrator just chooses one. We have chosen the minimum hops.
7) The process to find the spanning tree involves **three steps**:
   A) Every bridge has a built-in ID (normally the serial number, which is unique). Each bridge broadcasts this ID so that all bridges know which one has the smallest ID. The bridge with the smallest ID is selected as the root bridge (root of the tree). We assume that bridge B1 has the smallest ID. It is, therefore, selected as the root bridge.
   B) The algorithm tries to find the shortest path (a path with the shortest cost) from the root bridge to every other bridge or LAN. The shortest path can be found by examining the total cost from the root bridge to the destination. Figure 15.9 shows the shortest paths.
   C) The combination of the shortest paths creates the shortest tree, which is also shown in Figure.
   D) Based on the spanning tree, we mark the ports that are part of the spanning tree, the forwarding ports, which forward a frame that the bridge receives. We also mark those ports that are not part of the spanning tree, the blocking ports, which block the frames received by the bridge. Figure 15.10 shows the physical systems of LANs with forwarding points (solid lines) and blocking ports (broken lines).

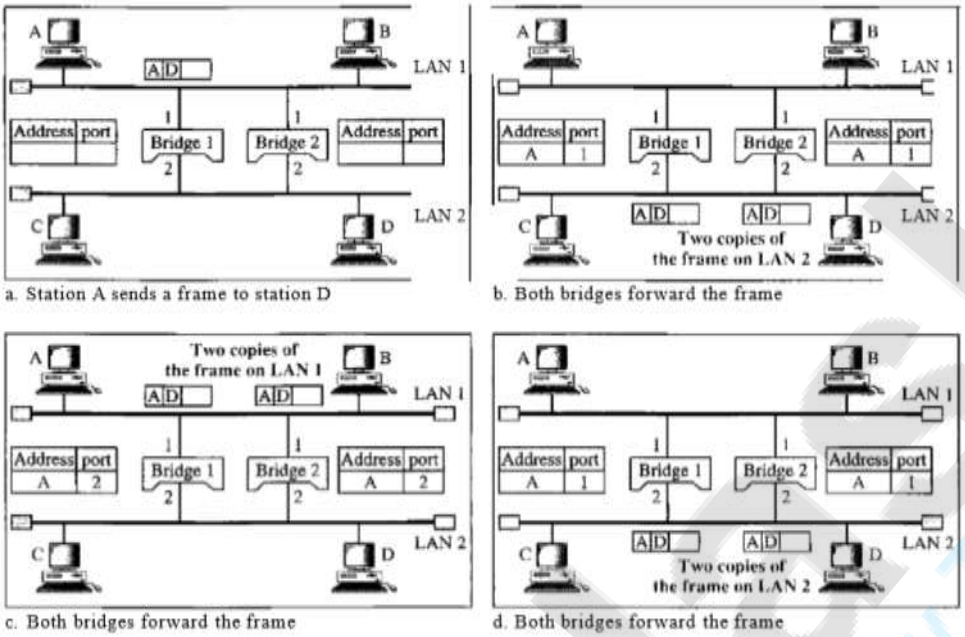

a. Station A sends a frame to station D

b. Both bridges forward the frame

c. Both bridges forward the frame

d. Both bridges forward the frame

2) Explain Backbone Network?

Answer: -

1) A backbone network allows several LANs to be connected. In a backbone network, no station is directly connected to the backbone; the stations are part of a LAN, and the backbone connects the LANs.
2) The backbone is itself a LAN that uses a LAN protocol such as Ethernet; each connection to the backbone is itself another LAN.
3) Although much different architecture can be used for a backbone, we discuss only the two most common: the bus and the star.

4) Bus Backbone

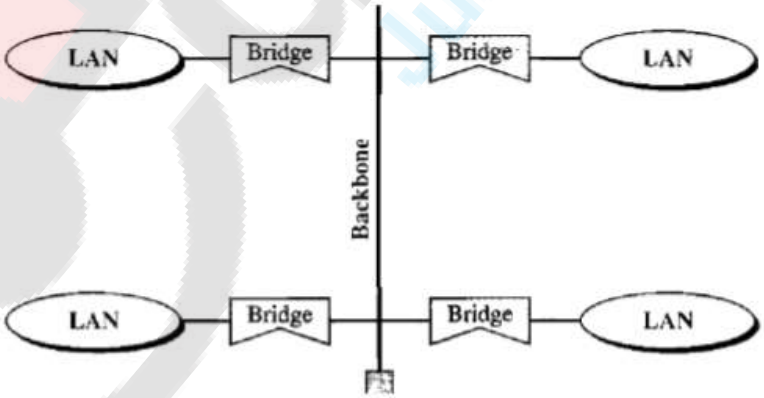

A) In a bus backbone, the topology of the backbone is a bus. The backbone itself can use one of the protocols that support a bus topology such as lOBase5 or lOBase2.

B) Bus backbones are normally used as a distribution backbone to connect different buildings in an organization.

C) Each building can comprise either a single LAN or another backbone (normally a star backbone). A good example of a bus backbone is one that connects single- or multiple-floor buildings on a campus.

D) Each single-floor building usually has a single LAN. Each multiple-floor building has a backbone (usually a star) that connects each LAN on a floor.

E) A bus backbone can interconnect these LANs and backbones. Figure shows an example of a bridge-based backbone with four LANs.

F) If a station in a LAN needs to send a frame to another station in the same LAN, the corresponding bridge blocks the frame; the frame never reaches the backbone.

G) However, if a station needs to send a frame to a station in another LAN, the bridge passes the frame to the backbone, which is received by the appropriate bridge and is delivered to the destination LAN.

H) Each bridge connected to the backbone has a table that shows the stations on the LAN side of the bridge. The blocking or delivery of a frame is based on the contents of this table.

5) Star Backbone

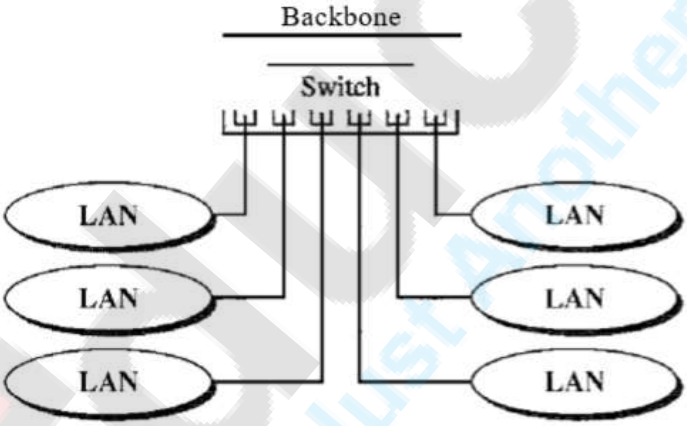

A) In a star backbone, sometimes called a collapsed or switched backbone, the topology of the backbone is a star. In this configuration, the backbone is just one switch (that is why it is called, erroneously, a collapsed backbone) that connects the LANs.

B) Star backbones are mostly used as a distribution backbone inside a building. In a multi floor building, we usually find one LAN that serves each particular floor.

C) A star backbone connects these LANs. The backbone network, which is just a switch, can be installed in the basement or the first floor, and separate cables can run from the switch to each LAN.

D) If the individual LANs have a physical star topology, either the hubs (or switches) can be installed in a closet on the corresponding floor, or all can be installed close to the switch.

E) We often find a rack or chassis in the basement where the backbone switch and all hubs or switches are installed.

3) Explain 2-Layer 3-Layer switch and Bridge and gateway?

Answer: -

1) A two-layer switch or a three-layer switch. A **three-layer switch** is used at the network layer; it is a kind of router. The **two-layer switch** performs at the physical and data link layers.
2) **Two-Layer Switches:** A two-layer switch is a bridge, a bridge with many ports and a design that allows better (faster) performance. A bridge with a few ports can connect a few LANs together. A bridge with many ports may be able to allocate a unique port to each station, with each station on its own independent entity. This means no competing traffic (no collision, as we saw in Ethernet).
3) A two-layer switch, as a bridge does, makes a filtering decision based on the MAC address of the frame it received. However, a two-layer switch can be more sophisticated. It can have a buffer to hold the frames for processing. It can have a switching factor that forwards the frames faster. Some new two-layer switches, called **cut-through switches,** have been designed to forward the frame as soon as they check the MAC addresses in the header of the frame.
4) **Three-Layer Switches:** -A three-layer switch is a router, but a faster and more sophisticated. The switching fabric in a three-layer switch allows faster table lookup and forwarding. In this book, we use the terms router and three-layer switch interchangeably.
5) **Routers:** -A router is a three-layer device that routes packets based on their logical addresses (host-to-host addressing). A router normally connects LANs and WANs in the Internet and has a routing table that is used for making decisions about the route. The routing tables are normally dynamic and are updated using routing protocols. Figure shows a part of the Internet that uses routers to connect LANs and WANs.
6) **Gateway**: - A gateway is normally a computer that operates in all five layers of the Internet or seven layers of OSI model. A gateway takes an application message, reads it, and interprets it. This means that it can be used as a connecting device between two internetworks that use different models.
7) For example, a network designed to use the OSI model can be connected to another network using the Internet model. The gateway connecting the two systems can take a frame as it arrives from the first system, move it up to the OSI application layer, and remove the message.
8) Gateways can provide security. The gateway is used to filter unwanted application-layer messages.

4) What is router? Explain the internal working of a router?

Answer: -

1) **Router:** -A router is a three-layer device that routes packets based on their logical addresses (host-to-host addressing). A router normally connects LANs and WANs in the Internet and has a routing table that is used for making decisions about the route. The routing tables are normally dynamic and are updated using routing protocols. Figure shows a part of the Internet that uses routers to connect LANs and WANs.
2) **Forwarding function—**the actual transfer of packets from a router's incoming links to the appropriate outgoing links at that router.
3) A high-level view of generic router architecture is shown in Figure 4.6. Four router components can be identified:

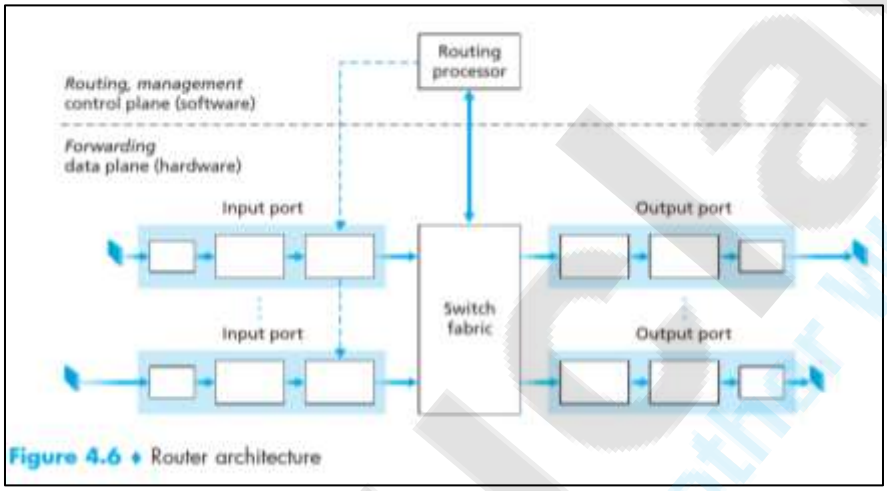

Figure 4.6 ♦ Router architecture

4) **Input ports: -** An input port performs several key functions. It performs the physical layer function of terminating an incoming physical link at a router; this is shown in the leftmost box of the input port and the rightmost box of the output port in Figure 4.6. An input port also performs link-layer functions needed to interoperate with the link layer at the other side of the incoming link; this is represented by the middle boxes in the input and output ports. Perhaps most crucially, the lookup function is also performed at the input port; this will occur in the rightmost box of the input port. It is here that the forwarding table is consulted to determine the router output port to which an arriving packet will be forwarded via the switching fabric. Control packets (for example, packets carrying routing protocol information) are forwarded from an input port to the routing processor. Note that the term port here— referring to the physical input and output router interfaces—is distinctly different from the software ports associated with network applications and sockets.
5) **Switching fabric: -** The switching fabric connects the router's input ports to its output ports. This switching fabric is completely contained within the router— a network inside of a network router.
6) **Output ports: -** An output port stores packet received from the switching fabric and transmits these packets on the outgoing link by performing the necessary link-layer

and physical-layer functions. When a link is bidirectional (that is, carries traffic in both directions), an output port will typically be paired with the input port for that link on the same line card (a printed circuit board containing one or more input ports, which is connected to the switching fabric).

7) **Routing processor: -** The routing processor executes the routing protocols maintains routing tables and attached link state information, and computes the forwarding table for the router. It also performs the network management functions.

5) **Short note on M/M/1 as a packet processing model?**
6) **Explain the spanning tree creation in broadcast routing. Also explain how the redundant packets are not received by the nodes?**
7) **Why do routers need queuing algorithm? Explain M/M/1 model?**
8) **Short note on Intermediate Devices? (Refer Educlash notes)**
   OR
   What are the intermediate devices? Discuss the various intermediate devices used at the various layers?
   OR
   What are the connecting devices? Explain the various connecting device used at the various layers of the communication model?
   OR
   How many types of different devices are required to interconnect the network?
9) **Short note on Tunnelling? Page no-429 (tanebaum book)**